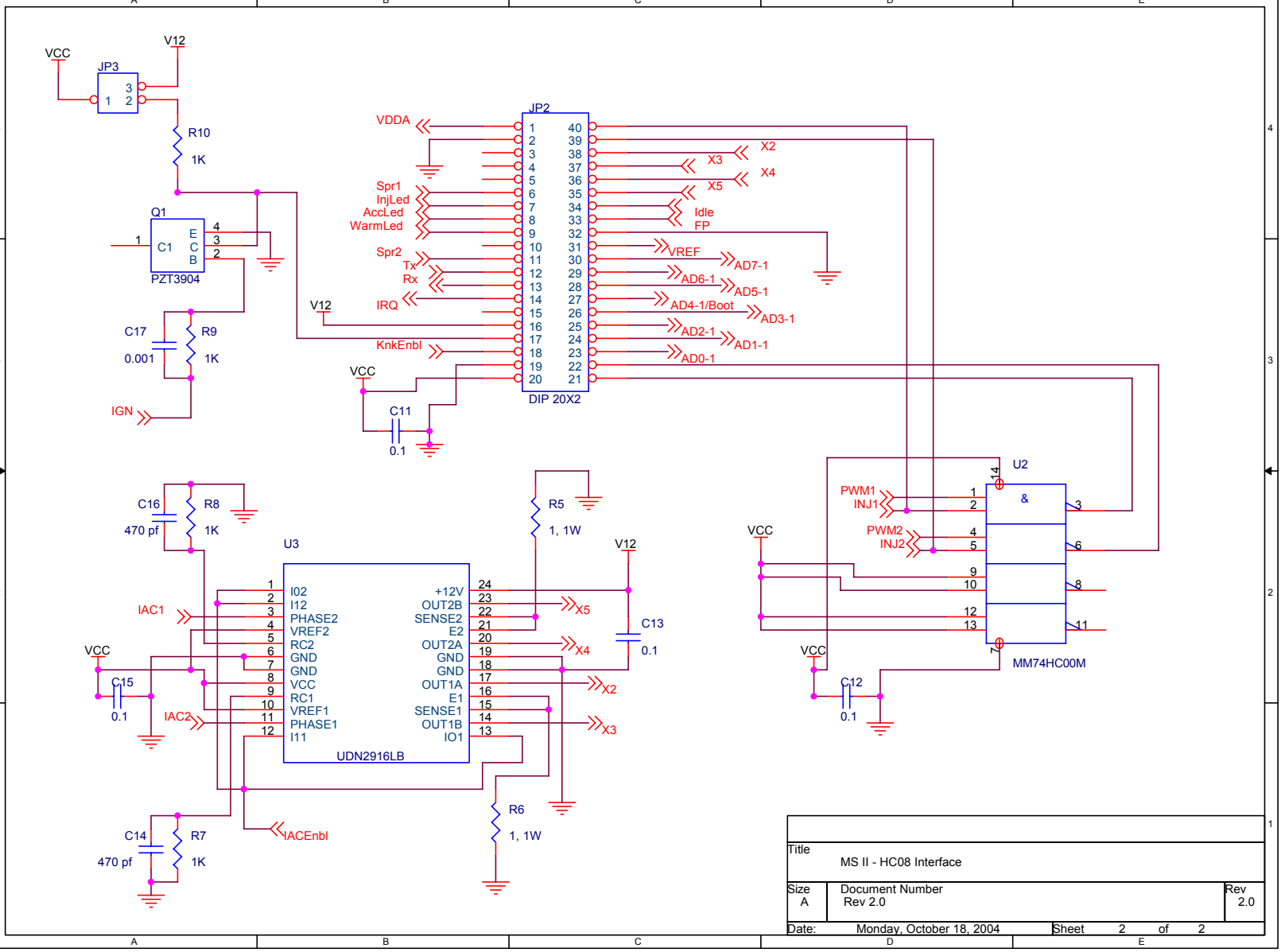

Title	MS II - HC08 Interface	
Size A	Document Number Rev 2.0	Rev 2.0
Date: Monday, October 18, 2004	Sheet 2 of 2	